REV	DESCRIPTION	DATE	ECN #	APPR
A	INITIAL RELEASE	00-XXX-19	XXXXX	MM

TRAYS ARE FOR REFERENCE ONLY

NOTE: TRAYS WITH DRAIN PLUGS MUST BE LOADED HEAD FIRST
(DRAIN PLUG NEAREST FRONT OF RACK)

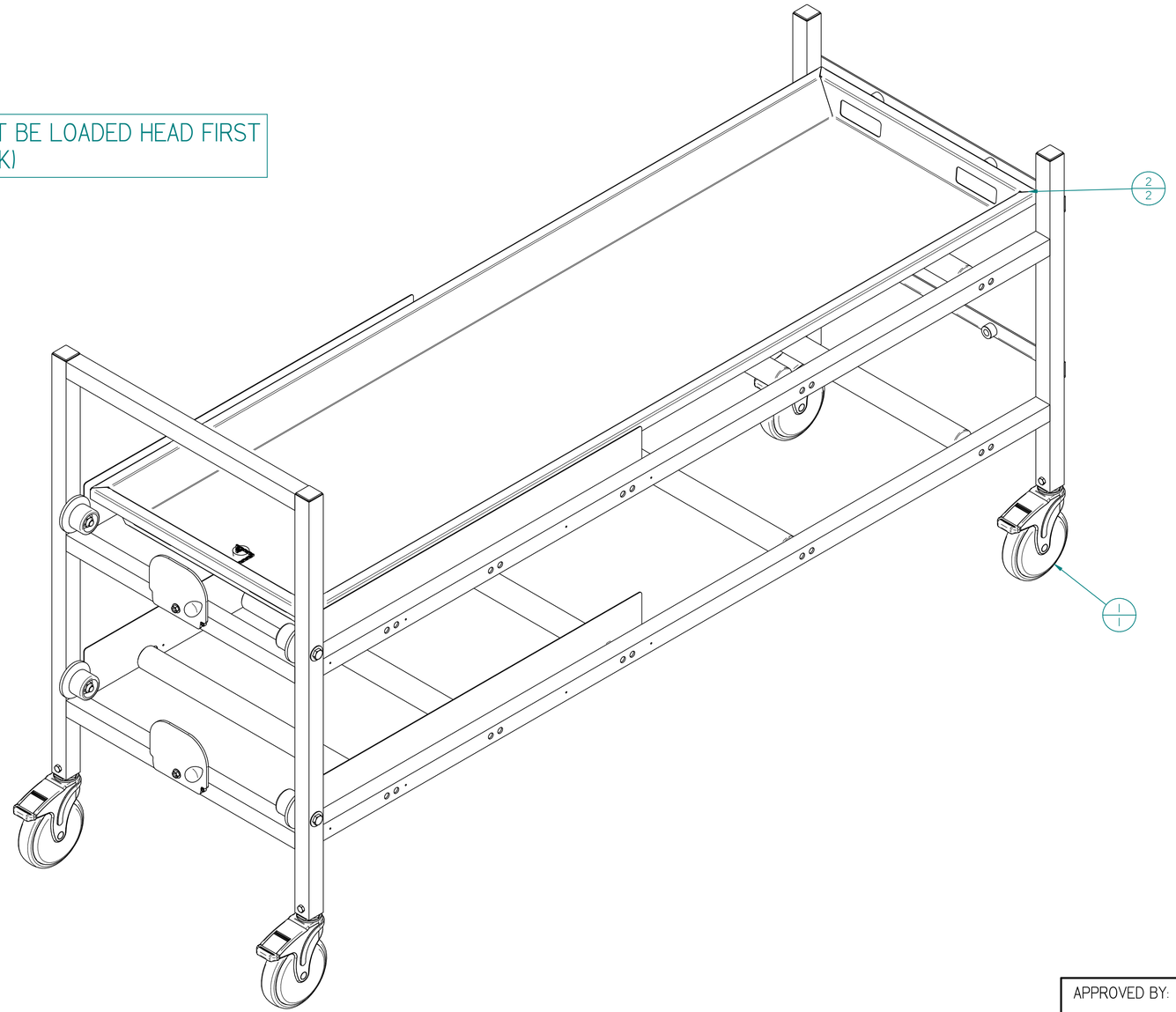

APPROVED BY: DATE:

☐ AS SHOWN
(PROCEED WITH FABRICATION)

☐ AS NOTED
(TO BE RESUBMITTED FOR FINAL APPROVAL)

Item Number	Quantity	File Name	Title	Material	Rev
2	2	JC023D.asm	BODY TRAY, 23X77, DRAIN HOLE		B
1	1	S0239-D.asm	23 X 2 X 01 - IF RACK - ASSY		D

MOPEC LEGAL NOTE

THE DRAWING, DESIGN AND INFORMATION PROVIDED IS INTENDED TO BE USED SOLELY BY THE CUSTOMER AS A REFERENCE. UNAUTHORIZED DISCLOSURE TO THIRD PARTIES, USE, DUPLICATION, EDITING OR MODIFICATIONS, WITHOUT PRIOR WRITTEN PERMISSION FROM MOPEC INC, IS STRICTLY FORBIDDEN AND IS IN VIOLATION OF U.S. COPYRIGHT LAWS AND WILL BE SUBJECT TO CIVIL DAMAGES AND PROSECUTION.

UNLESS OTHERWISE SPECIFIED:
ALL DIMENSIONS IN INCHES

TOLERANCES		
	0.0	± 0.1 in
	0.00	± 0.05 in
	0.000	± 0.010 in
	0.0000	± 0.0010 in
	ANGLES	±0.5°

BREAK ALL CORNERS 0.063 X 45°
ALL FILLET RADII R0.063 /0.125in
INSPECT OVAL DIMENSIONS

CUSTOMER NAME:

CITY, STATE: Error: No reference

PROJECT #: Error: No reference

MOPEC GROUP
Mopec ELEVATING PATIENCE | MORTECH MANUFACTURING

DRAWN TO 3RD ANGLE PROJECTION

DRAWN BY: jrudolph
DATE: 10/31/2022
CHECKED BY: ---
DATE: 10/31/2022
APPROVED BY:
DATE: MMcCLAIN 10/31/2022

PRODUCT NAME: IF23 201-C
DESCRIPTION: 23" X 2 X 01 - ROLLER RACK - MOBILE
SIZE: A2
DRAWING NUMBER: IF23 201-C APPROVAL.dft
REV: A
SCALE: 1:8
DO NOT SCALE IF IN DOUBT ASK
SHEET 1 OF 2

IF23 201-C APPROVAL.dft

REV	DESCRIPTION	DATE	ECN #	APPR
A	INITIAL RELEASE	00-XXX-19	XXXXX	MM

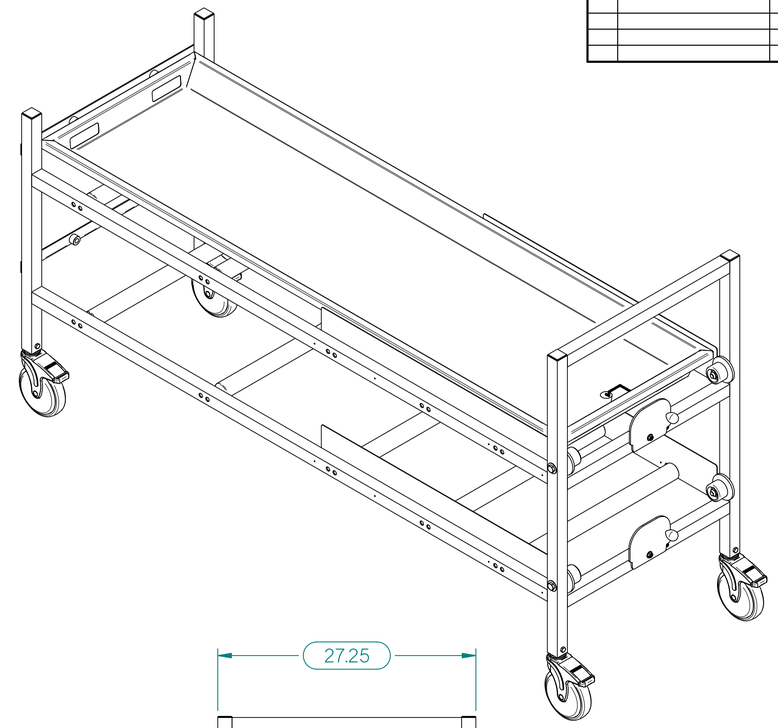

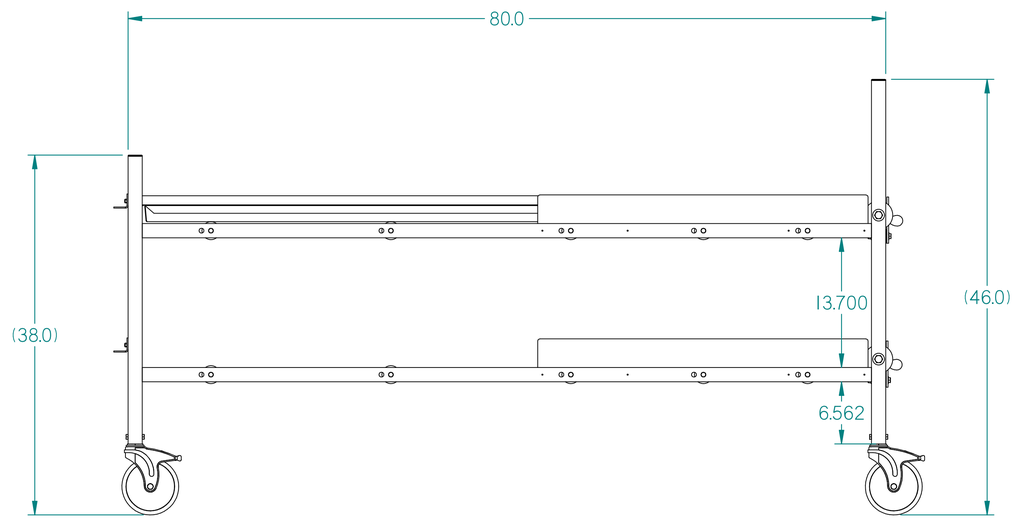

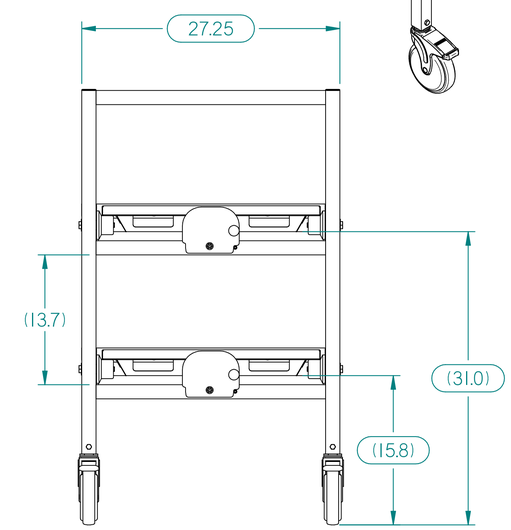

APPROVED BY: DATE:

☐ AS SHOWN
(PROCEED WITH FABRICATION)

☐ AS NOTED
(TO BE RESUBMITTED FOR FINAL APPROVAL)

MOPEC LEGAL NOTE

THE DRAWING, DESIGN AND INFORMATION PROVIDED IS INTENDED TO BE USED SOLELY BY THE CUSTOMER AS A REFERENCE. UNAUTHORIZED DISCLOSURE TO THIRD PARTIES, USE, DUPLICATION, EDITING OR MODIFICATIONS, WITHOUT PRIOR WRITTEN PERMISSION FROM MOPEC INC, IS STRICTLY FORBIDDEN AND IS IN VIOLATION OF U.S. COPYRIGHT LAWS AND WILL BE SUBJECT TO CIVIL DAMAGES AND PROSECUTION.

UNLESS OTHERWISE SPECIFIED:
ALL DIMENSIONS IN INCHES
TOLERANCES
0.0 ± 0.1 in
0.00 ± 0.05 in
0.000 ± 0.010 in
0.0000 ± 0.0010 in
ANGLES ±0.5°

BREAK ALL CORNERS 0.063 X 45°
ALL FILLET RADII R0.063 /0.125in
INSPECT OVAL DIMENSIONS

CUSTOMER NAME:

CITY, STATE: Error: No reference

PROJECT #: Error: No reference

MOPEC GROUP
Mopec ELEVATING PATHOLOGY MORTECH MANUFACTURING

DRAWN TO 3RD ANGLE PROJECTION

DRAWN BY: jrudolph
DATE: 10/31/2022
CHECKED BY: ---
DATE: 10/31/2022
APPROVED BY:
DATE: MMcCLAIN 10/31/2022

PRODUCT NAME: IF23 201-C
DESCRIPTION: 23" X 2 X 01 - ROLLER RACK - MOBILE
SIZE: A2
DRAWING NUMBER: IF23 201-C APPROVAL.dft
REV: A
SCALE: 1:1
DO NOT SCALE IF IN DOUBT ASK
SHEET 2 OF 2

IF23 201-C APPROVAL.dft